103-H89223-6641

SANYO DENKI
SANMOTION

Dimensions (Unit:mm)

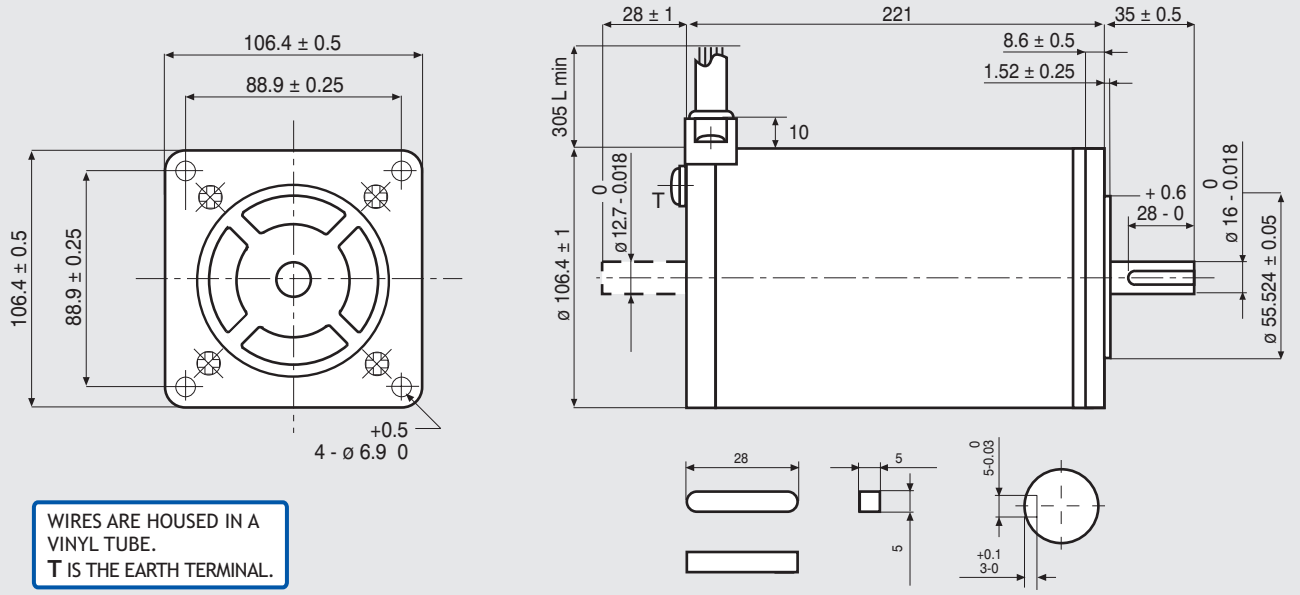

WIRES ARE HOUSED IN A VINYL TUBE.
T IS THE EARTH TERMINAL.

FEATURES

MODEL		103-H89223-6641 (103-H89223-6611)
BASIC STEP ANGLE		1.8° ± 0.09°
BIPOLAR CURRENT	(Amp)	12.0
UNIPOLAR CURRENT	(Amp)	
RESISTANCE	(Ohm)	0.16
INDUCTANCE	(mH)	2.0
BIPOLAR HOLDING TORQUE	(Ncm)	2460
UNIPOLAR HOLDING TORQUE	(Ncm)	
ROTOR INERTIA	(Kgm ^{2} x 10 $^{-7}$)	22000
THEORETICAL ACCELERATION	(rad x sec.$^{-2}$)	11100
BACK E.M.F.	(V/Krpm)	205
MASS	(Kg)	10
PROTECTION DEGREE		IP43
LEADS CODE		V

Codes between brackets refer to double shaft models.
Le sigle fra parentesi si riferiscono ai modelli bialbero.

TORQUE/SPEED CURVE

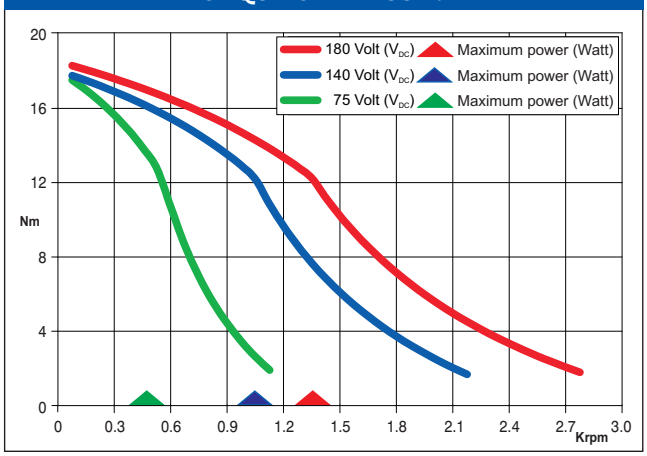

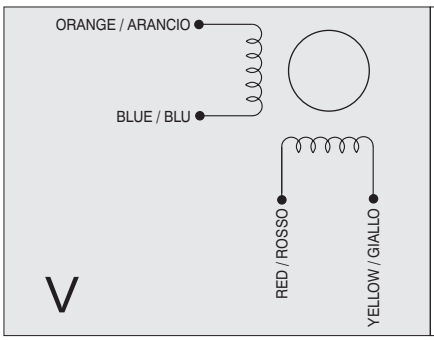

R.T.A. s.r.l. PAVIA (ITALY) SANYO DENKI CO.,Ltd (JAPAN)
EMC - 10-14

Suggested R.T.A. driver: contact R.T.A.